Noritz Building Management System Installation Manual

⚠ CAUTION In order to use this product safely. read this installation manual carefully and follow the installation instructions.

Part #	Compatible Models
BMS1-SC-401-6M	NC199 DVC NCC199 CDV NCC300 DV

Potential dangers from accidents during installation and use are divided into the following two categories. Closely observe these warnings, they are critical to your safety.

⚠ **WARNING**	WARNING indicates a potentially hazardous situation which, if not avoided, could result in death or serious injury.
⚠ **CAUTION**	CAUTION indicates a potentially hazardous situation which, if not avoided, may result in minor or moderate injury.

Requests to Installers

⚠ WARNING In order to use this product safely, read this installation manual carefully and follow the installation instructions.

- Failures and damage caused by erroneous work or work not as instructed in this manual are not covered by the warranty.
- Refer to installation manual attached to the appliance as well.
- Check that installation was done in accordance with this Installation Manual upon completion.
- After completion of installation, be sure to hand this Installation Manual to the customer.
- When you fasten the screws on the terminals (Warning lamp terminal and so on),do not use electric drivers, impact drivers and so forth.Tightening with excessive force may cause the terminals to be damaged and lead to failures.

Contents

If at any time during the installation and setup of this product you have questions or concerns, please contact Noritz America Engineering & Service at 866-766-7489 or visit http://support.noritz.com/.

Rev. 10/18

1. Included Accessories

Check for any missing items before starting installation.

Part	Shape	Qty	Part	Shape	Qty
Installation Manual (this document)		1	Strap-On Thermistor Sensors		2
Insulated Cords		2	Ground Wire		1
Power Supply (24 Volts)		1	Insulated Cord Connector Adaptor		1

2. Required Accessories

Name	Usage	Qty
Mounting Screws	Enclosure Mounting	4
Remote Controller-RC-9018M	Always necessary	1
Remote controller cord RC-Cord10 RC-Cord26	-The communication cord between the system controller and the remote controller can be lengthened to maximum of 450 feet -The communication cord between the system controller and each water heater can be lengthened to maximum of 45 feet	1 per heater

3. Introduction

■ Introduction to the System Controller with BMS

● **Overview**

The System Controller with BMS comprises of two components: the System Controller and the BMS device.This manual is intended to provide instruction for the installation and features of the System Controller and BMS device.

This manual is divided into 7 main sections

1. Mounting the enclosure.
2. BMS device protocol configuration.
3. Additional features of the BMS device
4. Connecting the System Controller
5. Initial Programming of the RC-9018M remote controller
6. Additional features of the RC-9018M remote controller and the SC-401-6M system controller
7. Plumbing diagrams and general information about water and gas piping.

● **Basic Operation**

The System Controller with BMS is used to combine 1-6 Noritz heaters into a single “Multi-unit system.” The system controller stages units on and off based on hot water demand and rotates their operation to ensure even usage. It also has two additional modes which optimize the system for operation with a recirculation line or storage tank. The BMS device provides “operational status”, “fault warning”, inlet and outlet temperature readings and optional external power ON/OFF control via Building Automation or Building Management Systems.

4. Parts Description

System Controller with BMS Parts Description

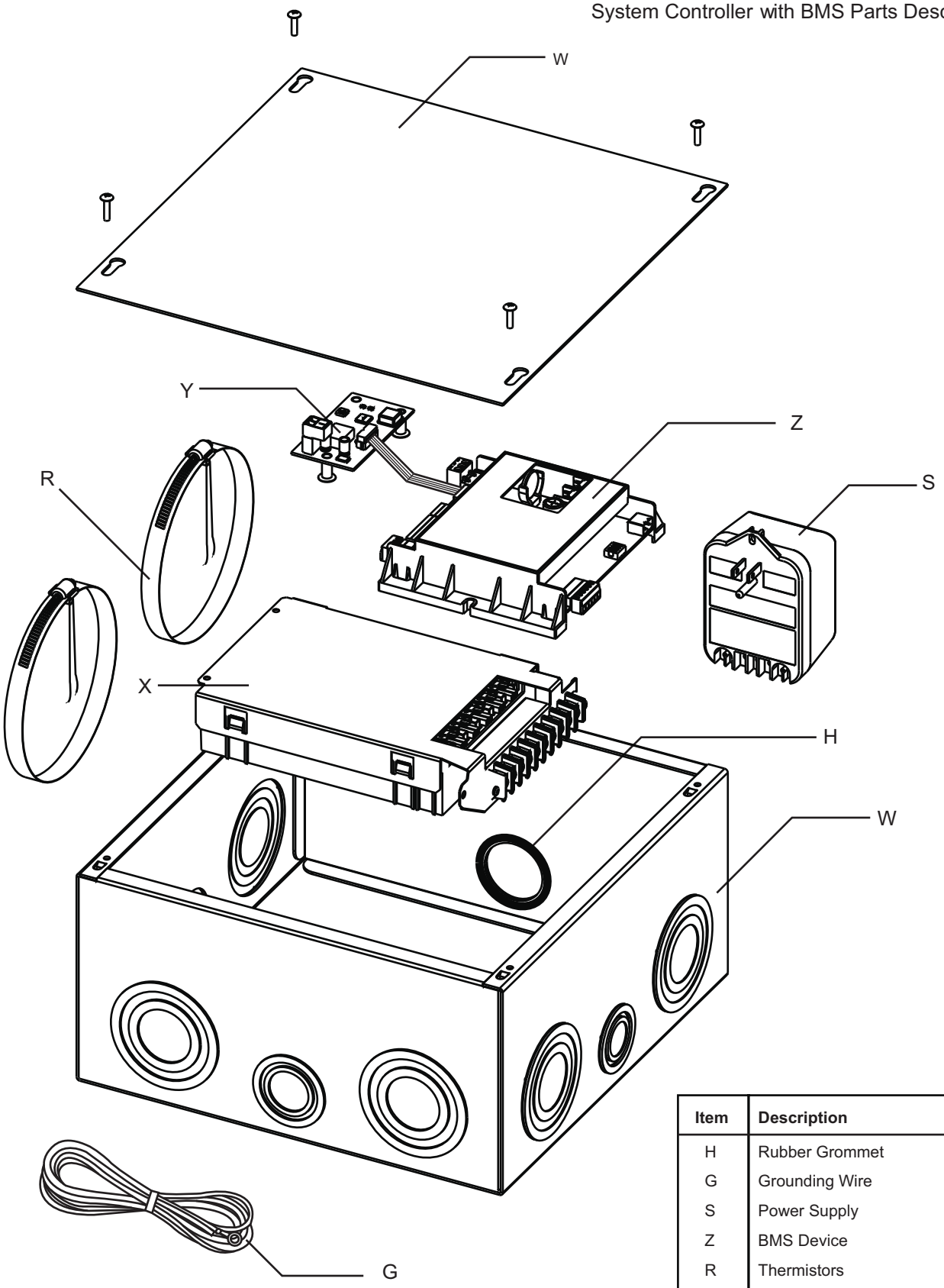

Item	Description
H	Rubber Grommet
G	Grounding Wire
S	Power Supply
Z	BMS Device
R	Thermistors
X	System Controller Module
Y	LonWorks Communications Card
W	Enclosure

4. Parts Description

BMS Device Interface Description List

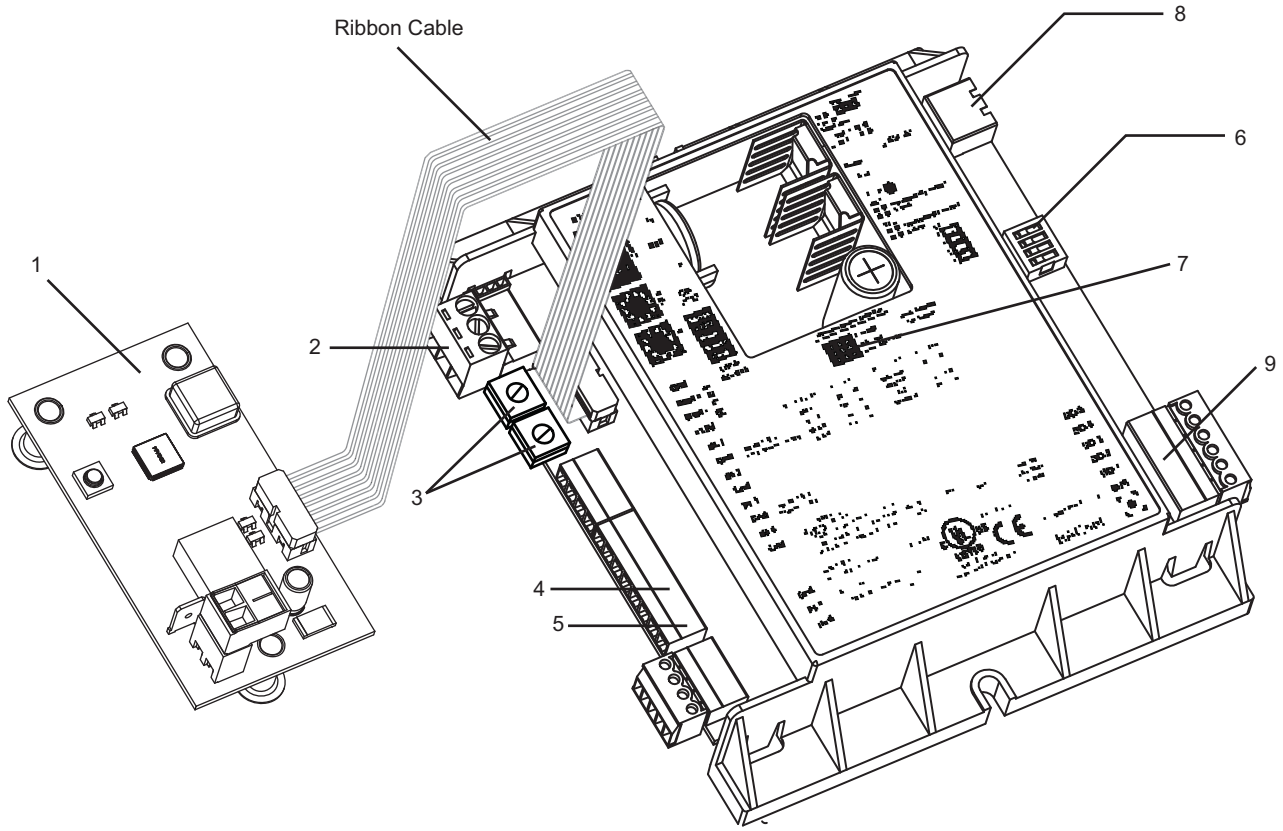

Item	Description
1	LonWorks Network Protocol Comm Card
2	Network Comm port (Bacnet, ModBus, or N2)
3	Address Rotary Switches
4	Cold Temperature Sensor input (in-3/gnd)
5	Hot Temperature Sensor input (in-4/gnd)
6	Dip Switches (1-4)
7	Communication Selector
8	Power Supply input, 24 VAC
9	Relay Digital Output (1A max @24 VAC/VDC)

5. Installation

■ Securing to the wall

Be sure to do

The weight of the device will be applied to the wall. If the strength of the wall is not sufficient, reinforcement must be done to prevent the transfer of vibration.

- Do not drop or apply unnecessary force to the device when installing. Internal parts may be damaged and may become highly dangerous.
- Install indoors away from moisture on a vertical wall. Ensure that it is level.

Check	Illustration
⚠ CAUTION • When installing with bare hands, take caution to not inflict injury. • Be careful not to hit electrical wiring, gas, or water piping while drilling holes. 1. Remove front cover. 2. Mount panel box vertically. Use mounting holes at positions (1)*,(2)*,(3)*,and (4) *. *Mounting screws not provided.	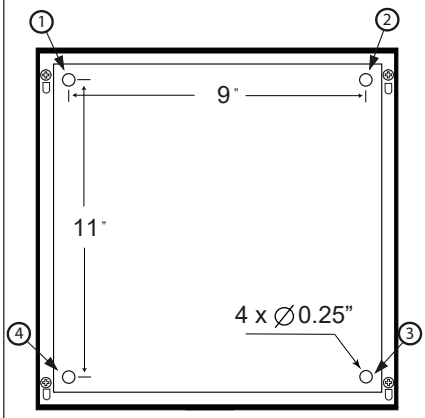 Fig 1: Provided Mounting Holes

■ Electrical Wiring

Consult a qualified electrician for the electrical work.

⚠ CAUTION

Do not connect electrical power to BMS device and to all water heaters (do not turn ON the power supply) before all electric wiring is completed. Otherwise, electric shock or failure of BMS device, the water heater, and system controller may occur.

This appliance must be electrically grounded in accordance with local codes, or in the absence of local codes, with the National Electrical Code, ANSI/NFPA 70. In Canada, the latest CSA C22.1 Electrical Code.
Field wiring to be performed at time of appliance installation.

⚠ WARNING

Electrical Shock Hazard
Do not turn power on until electrical wiring is finished. Disconnect power before servicing.
Failure to do so may result in death or serious injury from electrical shock.

⚠ CAUTION

Label all wires prior to disconnection when servicing controls. Wiring errors can cause improper and dangerous operation. Verify proper operation after servicing.

Ground

Do not connect the ground to the city water or gas piping. Do not tie the ground to a telephone line.

⚠ CAUTION

Electrostatic discharge can affect electronic components. Take precautions to prevent electrostatic discharges from personnel or hand tools during the system controller installation and servicing to protect the product's electronic control.

■ BMS Device Integration

Construction for BMS device

Operation	Illustration
1. Puncture rubber grommet (H).	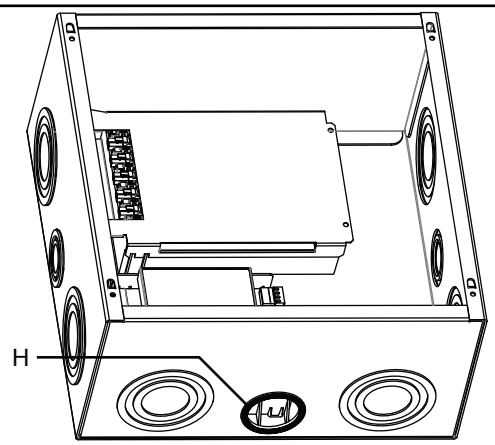
2. Mount thermistors on cold and hot water pipe. Included are metal clamps or optional zip ties.	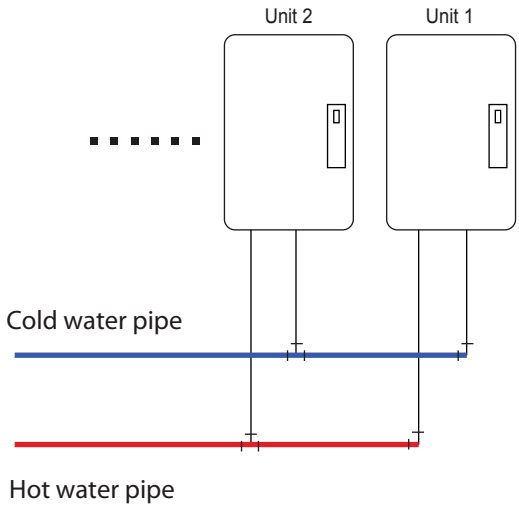
3. Route thermistor wires to screw terminal connector on BMS device , see figure. 8 feet of wire is included. Follow below wiring specifications if installation of thermistor requires extension of more than 8 ft of wire.	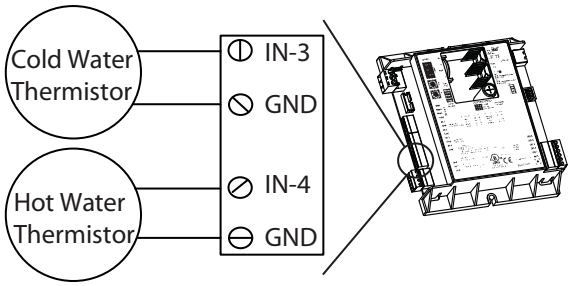

Type	Description
Precon ST-STP	10,000 ohm @ 77° F , type II

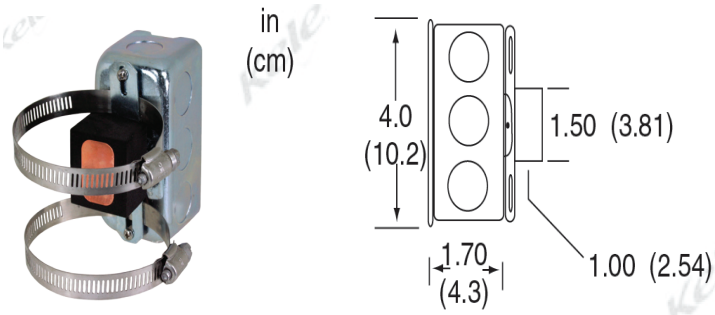

Max Length	Min Guage	Shielding
1000 ft.	22 AWG	Shielded

* Allow no more than 0.06 inch bare wire to protrude screw terminal connector.

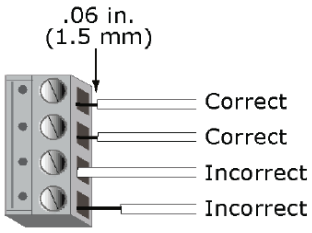

Input voltages will be from 0.33 Vdc to 2.52 Vdc.

BMS device network connection and configuration should only be performed by the site integrator or BAS/BMS administrator.

4. LonWorks is the default BMS device protocol setting. Connect to the lonwork network using the comm port on the Lon card (Y) then skip to step 6. Otherwise, continue to step 5.1 to configure protocols: BACnet ARC156, BACnet MS/TP, Modbus, or N2 .

Protocol	Wiring Specifications	Comm Port
Lonworks	• Compatible with TP/FT-10 channels using FTT- 10 and/or FTT-10A Free Topology Transceivers and LPT- 10 Link Power Transceivers • supports polarity insensitive free topology star, bus, daisy- chain, loop, or mixed topology wiring • Echelon 78 kbps bit rate free topology twisted pair	Lon Card: 2 position pluggable screw terminal

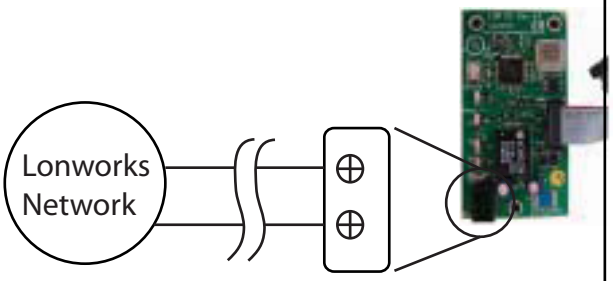

5.1 BMS device protocol configuration if other than LonWorks.
Note: Power should be disconnected before setting switches or jumpers.

5.1.1. Set "Communications Selector" jumper on BMS device.

Protocol	Communication Selector Jumper
BACnet ARC156	BACnet over ARC156
BACnet MS/TP	EIA- 485
LonWork	EIA- 485
Modbus	EIA- 485
N2	EIA- 485

Communications Selection

EIA-485

Communications Selection

BACnet over ARC156

5.1.2. Select protocol and baud rate via dipswitches 1,2,3, & 4

Protocols	Sw3	Sw4
BACnet MS/TP	off	off
N2	on	off
Modbus	off	on
Option Card (Lonworks)	on	on

Baud Rate	Sw1	Sw2
9600	off	off
19.2k	off	on
38.4k (Lonworks)	on	off
76.8k	on	on

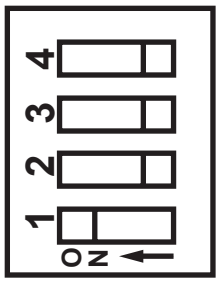

5.1.3. Select address using rotary switches.
Set the Ten's (10's) switch to the tens digit of the address, and set the Ones (1's) switch to the ones digit.
Ex. If the modules address is 01, point the arrow on the Tens (10's) switch to 0 and the arrow on the Ones (1's) switch to 1. Default address factory set at "01."

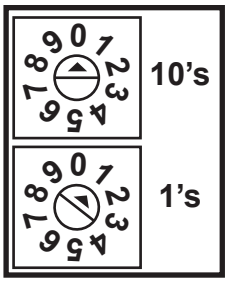

5.2. Connect the communications wiring to Comm Port in screw terminals labeled Net + , Net - , and SH (Shield.)

Protocol	Wiring Specifications
BACnet over ARC156	• 22 AWG, low capacitance, twisted, stranded, shielded copper wire • 2000 feet (610 meters), before needing a Repeater. • Devices should be daisy chained and not star wired.
BACnet MS/TP	• A dedicated 22 AWG to 18 AWG twisted pair wire (EIA 485) • 2000 feet (610 meters) for 76.8 kbps, or • 3000 feet (914.4 meters) for 9600 bps, 19.2 kbps, or 38.4 kbps, before needing a Repeater. • Devices should be daisy chained and not star wired.
ModBus	• A dedicated 22 AWG to 18 AWG twisted pair wire (EIA 48 5) • 3000 feet (914.4 meters) for 9600 bps, 19.2 kbps, or 38.4 kbps. • Devices should be daisy chained and not star wired.
N2	• A dedicated 22 AWG to 18 AWG twisted pair wire (EIA 485) • 3000 feet (914.4 meters) for 9600 bps, 19.2 kbps, or 38.4 kbps. • Devices should be daisy chained and not star wired.

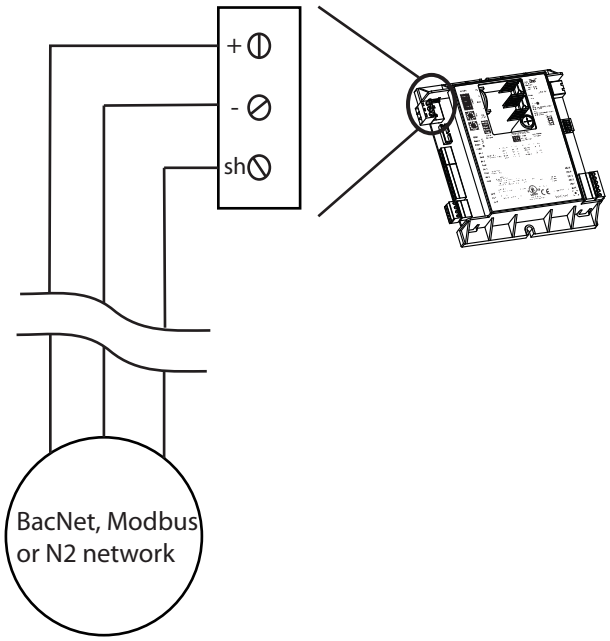

7. BMS device Class 2 Power Supply.

Be sure to do

Do not connect BMS device (z) power supply (s) until electrical wiring for system controller module (x) has been completed as detailed in section “Connecting the System Controller”.

Power Supply Specifications	
Input voltage:	120 VAC, 60HZ
Output Voltage:	24 VAC
Dimensions	4.14" H x 2.74"W x 2.2"D

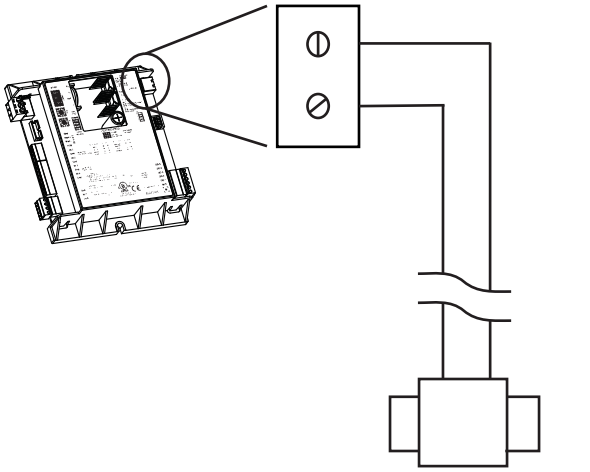

● Protocol Mapping

- The below describes protocols BACnet, Lonworks, Modbus, and N2 Input/Output variables; used by building management systems site integrators / administrators for programming of system status monitoring and system control.
- Variables Inlet Temperature Calibration, Inlet Temperature, Outlet Temperature Calibration, and Outlet Temperature are defined in units of degrees Fahrenheit.
- Variables “Inlet Temperature Calibration”, and “Outlet Temperature Calibration” allow calibration of temperature readings when pipe surface temperature is different from water flow temperature. Default value is zero.

  i.e. if “Inlet temperature” thermistor = 60 deg F , and variable “Inlet Temperature Calibration” = 5 then variable “Inlet Temperature” = 65 deg F. (60+5=65).

  Addition of negative numbers is allowed. i.e. 60+(-5)=55

LonWorks Protocol Mapping								
Bacnet Object Description				Lonworks Network Variable Description				
Point Name	Name	Type:ID	Read Only	SNVT #	SNVT	Element #	Direction	NV Name
Inlet Temp Calibration	inlet_temp_calibration_1	AV:3		6	SNVT_count_inc (9)	0	Input (non-polling)	nviInletTempCal
Inlet Temperature	inlet_temperature_1	AV:1	✔	3	SNVT_temp_p (105)	0	Output (non-polled)	nvoInletTemp
Outlet Temp Calibration	outlet_temp_calibration_1	AV:4		7	SNVT_count_inc (9)	0	Input (non-polling)	nviOutletTempCal
Outlet Temperature	outlet_temperature_1	AV:2	✔	4	SNVT_temp_p (105)	0	Output (non-polled)	nvoOutletTemp
Fault	fault_1	BV:3	✔	2	SNVT_count_inc (9)	0	Output (non-polled)	nvoUnitFault
Status	status_1	BV:2	✔	1	SNVT_count_inc (9)	0	Output (non-polled)	nvoUnitStatus
Unit Start / Stop	unit_start_stop_1	BV:1		5	SNVT_count_inc (9)	0	Input (non-polling)	nviStartStop

Modbus Protocol Mapping					
BACnet Object Description				Modbus Register Description	
Point Name	Name	Type:ID	Read Only	Object Type	Register
Inlet Temp Calibration	inlet_temp_calibration_1	AV:3		float value	40001
Inlet Temperature	inlet_temperature_1	AV:1	✔	float value	40003
Outlet Temp Calibration	outlet_temp_calibration_1	AV:4		float value	40005
Outlet Temperature	outlet_temperature_1	AV:2	✔	float value	40007
Fault	fault_1	BV:3	✔	discrete in	10001
Status	status_1	BV:2	✔	discrete in	10002
Unit Start / Stop	unit_start_stop_1	BV:1		discrete out	1

N2 Protocol Mapping					
BACnet Object Description				N2 ID Description	
Point Name	Name	Type:ID	Read Only	Type	ID
Inlet Temp Calibration	inlet_temp_calibration_1	AV:3		data float	1
Inlet Temperature	inlet_temperature_1	AV:1	✔	data float	2
Outlet Temp Calibration	outlet_temp_calibration_1	AV:4		data float	3
Outlet Temperature	outlet_temperature_1	AV:2	✔	data float	4
Fault	fault_1	BV:3	✔	binary in	1
Status	status_1	BV:2	✔	binary in	2
Unit Start / Stop	unit_start_stop_1	BV:1		binary out	1

6. Additional Features

External ON/OFF Operation Control for System Controller SC-401-6M

- Connect the BMS device output relay to activate the external Power ON/OFF control in addition to the Power ON/OFF Button of the remote controller
  - If the BMS relay is switched from open to short, the Power ON/OFF Button of the water heater is turned " ON".
  - If the BMS Relay is switched from short to open, the Power ON/OFF Button is turned "OFF".
- The "External Operation Switch" wire is short-circuited when the product is shipped from the factory. When you use this feature, cut the short-circuit electric wire and connect the BMS relay (terminal DO-1 &BUS), and then disconnect the short-circuit connector.

  * Check Protocol Map for Input/Output control variable definitions.

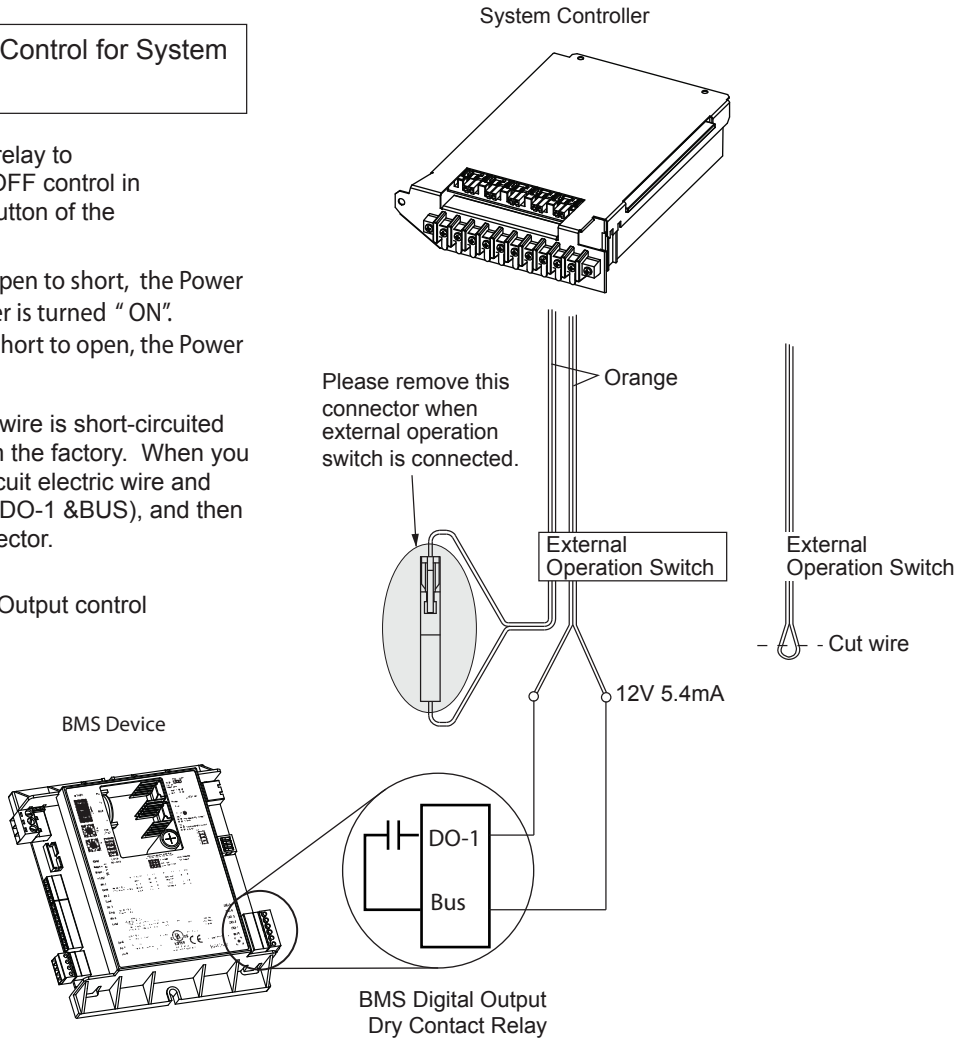

- ON/OFF Control and Cycle Operation Syncronization
  - Whether or not the Power ON/OFF Button is synchronized to the cycle operation, it can be changed via settings within the remote controller. (it can be changed only for recircuration system).
    If the BMS Digital Output Relay is switched from open to short, the setting is switched as shown below.
    Power ON/OFF Button is synchronized: Power ON/OFF Button is turned "ON", cycle operation is turned "ON"
    Power ON/OFF Button is not synchronized: only Power ON/OFF Button is turned "ON"

7. Specifications & Troubleshooting

BMS Device Specifications

Power	24 Vac, 50-60 Hz, 20 VA power consumption. Single Class 2 source only, 100 VA or less
Comm Port	3 pin port configurable for ARC156 (BACnet-over-ARC156) or EIA-485 communications (BACnet ms/tp,Modbus, or N2)
Digital Output	Relay contacts rated at 1 A max. @ 24 Vac/Vdc
Battery	7-year Lithium CR2032 battery provides 22,500 hours of intermittent use or 6 months continuous use when engaged for data retention.
Status Indicators	LED's indicate status of communications, running, errors, and power.
Environmental Operating Range	0- 130 deg F (-17.8 to 54.4 deg C), 10-90% relative humidity, non-condensing
BACnet Support	Conforms to the Advanced Application Controller (B-AAC) Standard Device Profile as defined in ANSI/ASHRAE Standard 135-2004 (BACnet) Annex L
Listed By	UL-916 (PAZX), cUL-916(PAZX7),FCC Part 15- Subpart B-Class A, CE EN50082-1997

LonWorks Card Specifications

Network Polarity	Polarity insensitive
Wiring	• Supports polarity insensitive free topology star,bus,daisy-chain,loop,or mixed topology wiring. • Echelon 78 kbps bit rate free topology twisted pair on 2 position pluggable screw terminal
Status Indicators	LED's indicate status of communications, running, errors and power.
FT3120 Smart Transceiver FT X-1 Communication Transformer	Compatible with TP/FT-10 channels using FTT-10 and/or FTT-10A Free Topology Transceivers and LPT-10 Link Power Transceivers
Environmental Operating Range	-40 to 150 deg F (-40 to 65.6 deg C), 10-95% relative humidity, non-condensing
Listed By	UL 916 and C22.2 No. 205-M1983 (cUL for Canada)

Compliance

FCC Compliance	This equipment has been tested and found to comply with the limits for a Class A digital device, pursuant to Part 15 of the FCC Rules. These limits are designed to provide reasonable protection against harmful interference when the equipment is operated in a commercial environment, this equipment generates, uses, and can radiate radio frequency energy and, if not installed and used in accordance with the instruction manual, may cause harmful interference to radio communications. Operation of this equipment in a residential area is likely to cause harmful interference in which case the user will be required to correct the interference at his own expense. CAUTION: Changes or modifications not expressly approved by the responsible party for compliance could void the user's authority to operate the equipment.
BACnet Compliance	BACnet is a registered trademark of ASHRAE. ASHRAE does not endorse,approve or test products for compliance with ASHRAE standards. Compliance of listed products to requirements of ASHRAE Standard 135 is the responsibility of the BACnet manufactureres Association (BMA). BTL is a registered trademark of the BMS
CE Compliance	WARNING: This is a Class A product. In a domestic environment, this product may cause radio interference in which case the user may be required to take adequate measures.

BMS Device Troubleshooting

Most common communication problems stem from one of the following conditions.

1. Wiring termination.
   - When wiring an EIA-485 connection, the wire is terminated plus (+) to (+) and minus (-) to minus (-). If the receive LED is solid, this means you have the connection incorrectly terminated
2. Jumper selection.
   - Make sure the jumper for the communication port is set to the communication networks wiring type EIA-485 or BACnet over ARC156.
3. Dipswitch selection.
   - Make sure the correct protocol is chosen. Switches 3 & 4.
   - Make sure the correct baud rate is chosen. Switches 1 & 2.
     NOTE: These settings are defined at controller start-up. Power must be cycled to make a settings change.
4. Addressing
   - The rotary address switches define the BMS device individuality on the network. Each BMS device must have a unique address. Default factory setting is “02”.

Connections Diagram

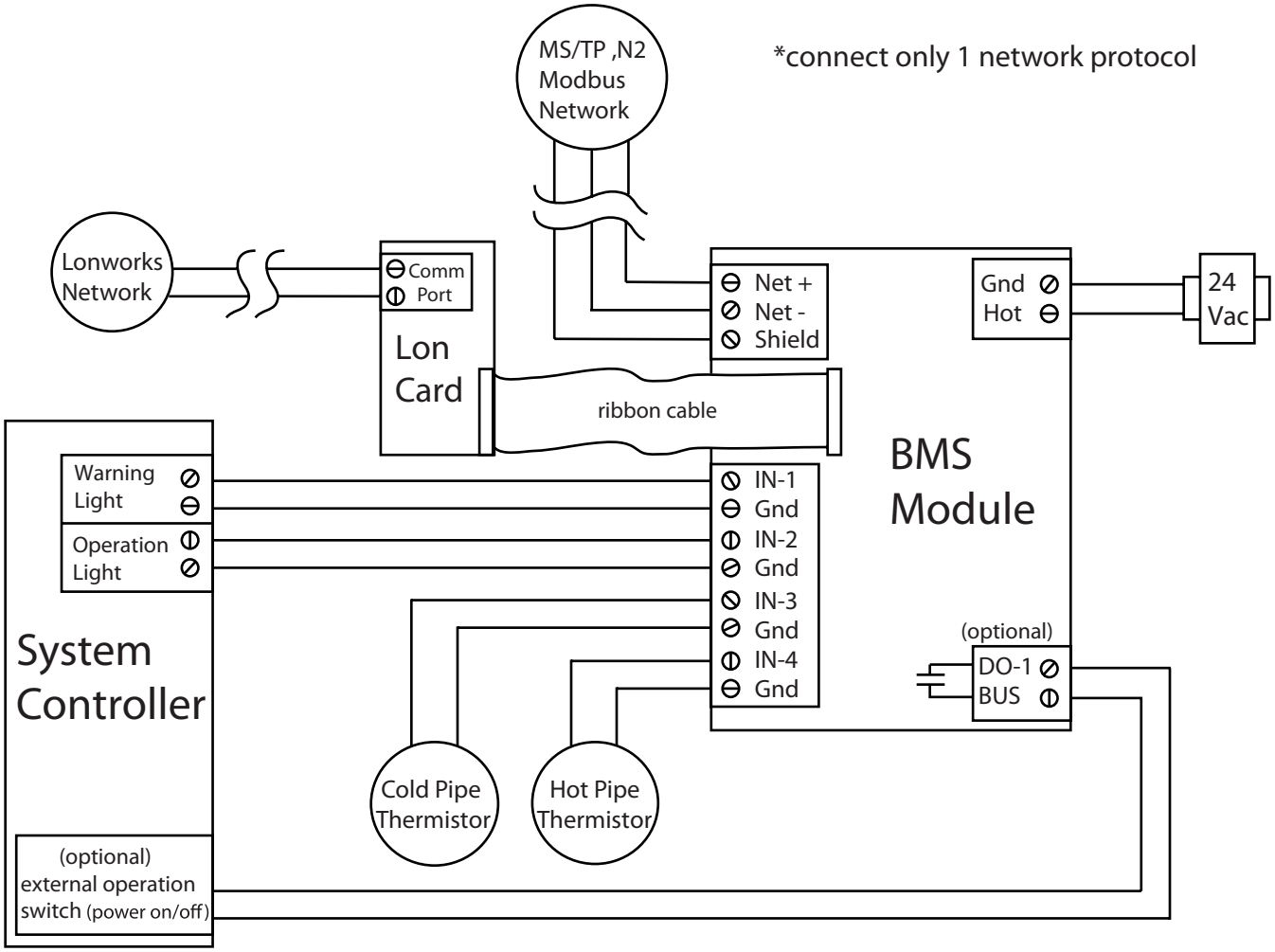

If at any time during the installation and setup of this product you have questions or concerns, please contact Noritz America Engineering and Service at 866-766-7489 or visit http://support.noritz.com

8. Connecting the System Controller

■ Electrical Wiring

Consult a qualified electrician for the electrical work.

⚠ CAUTION

- Do not connect electrical power to all water heaters (do not turn ON the power supply) before all electric wiring is completed. Otherwise, electric shock or failure of the water heater and system controller may occur.
- If a remote controller cord is not connected, the temperature of the water heater is fixed to 120°F (50°C) and high-temperature hot water is discharged. So check it is surely connected.
- Be sure to tighten the screw to the terminal block manually and do not use an electric screwdriver or impact driver. Otherwise, the terminal block may be damaged.

This appliance must be electrically grounded in accordance with local codes, or in the absence of local codes, with the National Electrical Code, ANSI/NFPA 70. In Canada, the latest CSA C22.1 Electrical Code.

Caution: Label all wires prior to disconnection when servicing controls. Wiring errors can cause improper and dangerous operation. Verify proper operation after servicing.
Field wiring to be performed at time of appliance installation.

⚠ WARNING

Electrical Shock Hazard
Do not turn power on until electrical wiring is finished. Disconnect power before servicing.
Failure to do so may result in death or serious injury from electrical shock.

Ground

- Connect a grounding wire comes from the system controller to unit 1. .
  An electrician should do this work.

Do not connect the ground to the city water or gas piping. Do not tie the ground to a telephone line.

⚠ CAUTION

Electrostatic discharge can affect electronic components. Take precautions to prevent electrostatic discharges from personnel or hand tools during the system controller installation and servicing to protect the product's electronic control.

● When two or more multi-unit systems are installed in parallel

One remote controller is necessary for each multi-unit system (i.e. 3 multi-unit systems will require 3 system controllers and 3 remote controllers). Each system will have separately wired remote controller cords.

■ For the combined use pattern

A. When there is no circulation pipe (standard type)

Number of units	System controller	Remote controller
1 to 6	SC-401-6M	RC-9018M

B. When there is a circulation pipe

Condition	Number of units	System controller	Remote controller
Recirculation type (circulation heat-retention with external pump)	1 to 6	SC-401-6M	RC-9018M
Storage Tank Recirculation type (circulation heat-retention with external pump)	1 to 6	SC-401-6M	RC-9018M

● **Basic Operation**

The SC-401-6M system controller is used to combine 1 to 6 Noritz heaters into a single “multi-unit system” The system controller stages units on and off based on hot water demand and rotates their operation to ensure even usage. It also has two additional modes which optimize the system for operation with a recirculation line or storage tank.

● **Unit Staging**

Staging allows the multi-unit system to track hot water demand from the minimum flow rate of a single unit up to the maximum output of several units. When the primary firing heater reaches ~50% of its maximum output, the system controller activates the next unit in the system. When both these units reach ~50% of their maximum output, a third unit is activated and so on. The SC- 01-6M may also be configured to activate two heaters during primary firing to allow for rapid initial hot water demand.

● **Unit Rotation**

The SC-401-6M system controller rotates operation of the primary firing heater every 8 hours of combustion time or up to 24 hours of plug-in time. This helps to ensure even usage of all units.

UNIT1	UNIT2	UNIT3	UNIT4	UNIT5	UNIT6
1st	2nd	3rd	4th	5th	6th

⬇ Rotation

6th	1st	2nd	3rd	4th	5th

⬇ Rotation

5th	6th	1st	2nd	3rd	4th

⬇ Rotation

4th	5th	6th	1st	2nd	3rd

● **System Selection**

The SC-401-6M allows the user to select two additional system types: “Recirc” and “Tank recirc.” These settings optimize performance with recirculation and storage tank systems, and allow the system controller to operate one or two pumps.

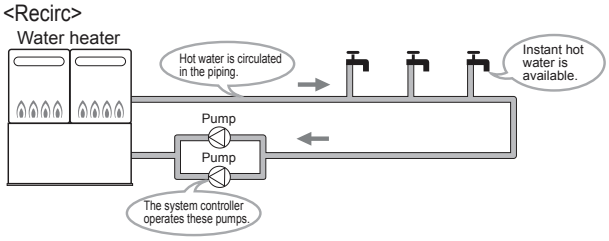

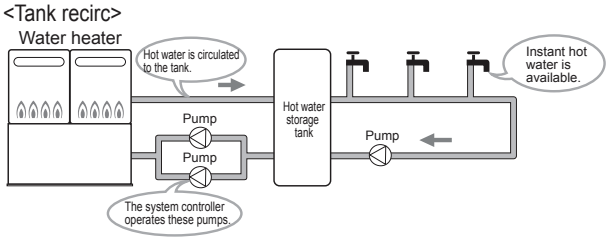

* These diagrams are for illustration purposes only.

■ For NC199 and NCC199 series

* Circuit board is indicated as P.C.B.

Open the cover of the external remote controller cord terminal block of each water heater.

● Construction work for unit 1 (Water heater to which remote controller is attached)

Operation	Illustration
Open the front cover 1. Connect the remote controller cord to the external remote controller cord terminal block. (Refer to the remote controller RC-9018M section of the installation manual). 2. Connect the opposite side of the remote controller cord that was connected in the step 1 to the remote controller. * Refer to the installation manual. 3. 1) Disconnect the connector 90 (white) from the P.C.B. of the water heater. Use the insulated cord labeled “DVC ERV” and connect the two connectors with the labeled end to the water heater. ! (For model NC1991 series, remove connector adaptor from insulated cord) 2) Install the other end of the cord to the system controller-(connector 90 (yellow) with a tag “to Connector 90” that comes from the system controller. And connector 90 (yellow) with a tag “to Remote Controller Terminal” that comes from the system controller.) 3) Use the remaining insulated cord. Install cord to the connector B5 of water heater. (White tag labeled “SYSTEM CONTROLLER” that comes from the heater P.C.B.) 4) Install the other end of the cord to the system controller. Plug the cord into the connector B5 (white) labeled “to connector B5” coming from the system controller P.C.B. 5) Pull a grounding wire in the junction box of Unit 1 and tighten the round terminal of the grounding wire with a grounding screw of the unit. If there is a electrical conduit, place the grounding wire in the electrical conduit. (For the attachment to the junction box, refer to the installation manual of the unit.)	Unit 1 (The Unit with the Remote Controller) P.C.B. "SYSTEM CONTROLLER" tag B5 90 90 Remove it for connecting the system controller. System Controller Connector color: yellow B5 90 90 "SYSTEM CONTROLLER" tag P.C.B. B5 90 90 "DVC ERV" tag

● Construction work for each water heater (Unit 2 to 6: water heater to which the remote controller is not attached)

4. Using the remote controller cord from each water heater, plug the connector into the system controller plugs for units 2-6. (The number of the remote controller cords necesary is determined by the total number of heaters minus one.) 1) Connect the connector for the communication cord with unit 2 of the system controller with the connector side of the remote controller cord. The connector No.2 is for unit 2 and the connector No. 3 is for unit 3.	water heater connection terminal (system controller plug) connector No.2 connector No.3 connector No.4 connector No.5 connector No.6 System Controller Connector color: yellow Remote controller cord (Required accessory) B5 90 90 Remote controller cord water heater connection terminal to the linked water heater ⇦

● Construction work of each water heater (Unit 2 to 6: water heater to which remote controller is not attached)

6. Connect Y terminal side of the remote controller cord that was connected in the step 5 to the corresponding external remote controller cord terminal block of unit 2 to 6.	* Do not have to open the front covers of these units. Unit 2 P.C.B. Unit 6 P.C.B. For system controller

* After all connections are made, replace the front cover of unit #1 (taking special care to do not crush any wires) and the covers of the external remote controller cord terminal blocks of all connected water heaters.

9. System Controller to Heater Wiring Diagram

■ Wiring Diagram (Multi-unit System Wiring)

◆When six units are installed

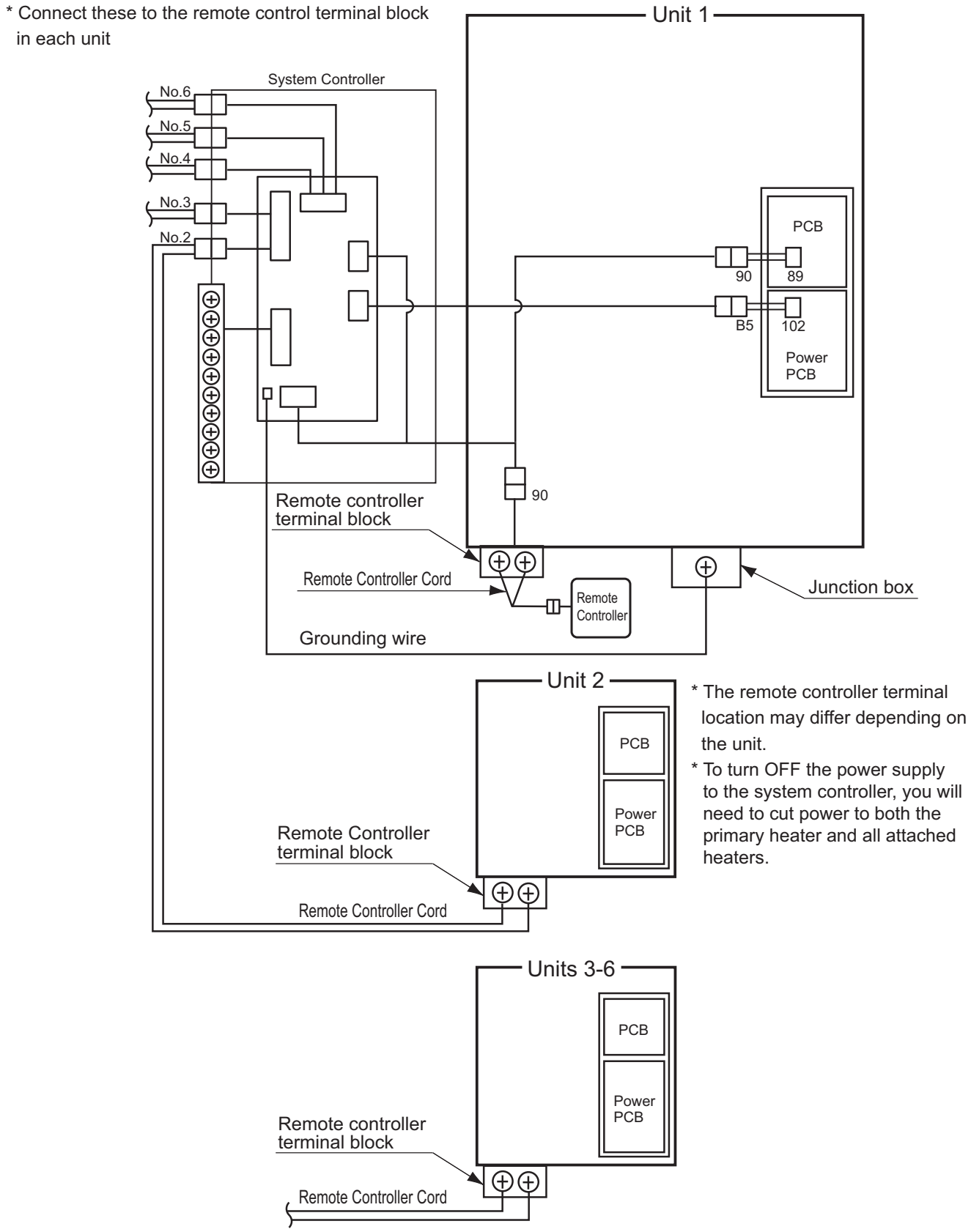

10. Remote button and display overview

■ Remote Controller (Required Accessories : RC-9018M)

◆ The remote controller will emit a tone when a button is pressed.

* This Remote Controller is not resistant to water, steam, chemicals, or UV rays. Please install it in a location where it will not be exposed to these conditions. If it must be installed outdoors, please use a weatherproof enclosure. Consult the RC-9018M Installation Manual for details.

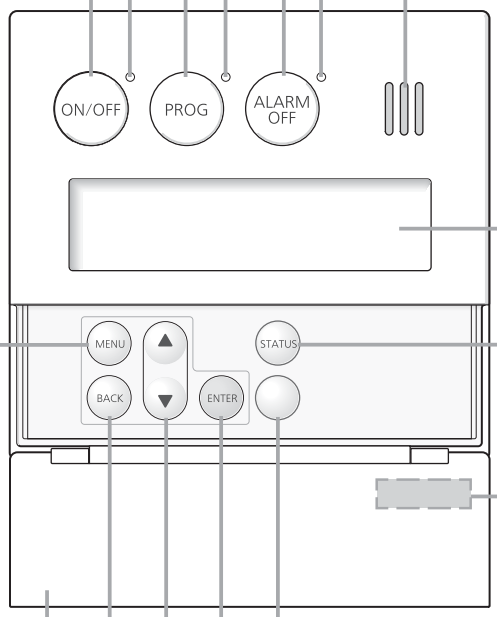

Prog Button / Indicator (Red)

Activates the automatic water heater power "ON" or "OFF" setting as determined by the user selected schedule.

Power ON /OFF Button / Indicator (Green)

For turning the water heater on/off.

Alarm Off Button / Indicator (Red)

Stops the tone that is emitted when an error occurs. (page 28.)

Speaker

Display Screen

(Next page)

Menu Button

* Use to change system settings or to return to the home screen.
* If you press the menu button and press the temperature setting buttons, Sys monitor is sometimes displayed. However, do not use this mode as it is meant for installation or service personnel only.

Status Button

Check the status of the system or the number of installed units. (page 15, 28.)

Remote Controller Part Number

The part number is printed on the surface of the cover.

Cover shown in the open position.

Lock Button

Locks remote controller operation. (page 19.)

Back Button

Returns to the previous screen while making system settings or checking status.

Enter Button

Confirms changes made by the user.

Hot Water Temperature Setting Buttons

For setting the hot water temperature, and other settings.

◆ Screen Display

* The screen display shown below is for illustration purposes only.
  The actual display will vary depending on how the water heater is being used.
* After a button is pressed, the display will gradually become darker to prevent unnecessary power consumption by the remote controller.

Flame Symbol

The flame symbol is displayed during combustion when using hot water or recirculation functions.

Display for Temperature Setting

During normal operation, the set temperature is displayed.

Display for High Temperature Hi temp

Displays when the set temperature is 125°F/55°C (131°F) or higher.

Temperature Setting

(Ex.: 110°F)

Clock Display

(Ex.: AM10:15)
Normally the clock display is not shown when the power ON/OFF button is "OFF".
* This setting can be changed so that the clock is displayed even when the power button is turned "OFF". (page 18.)

Error Code

A number will flash if a failure occurs. (page 28.)

Display for Recirculation Operation

* For systems that use recirculation operation, the symbol is displayed when the power ON/OFF button is set to "ON".
* It is displayed during the recirculation operation.

Locked Display

The lock symbol is displayed when the remote controller is locked. (page 19.)

Recirculation Timer

The clock symbol is displayed when the recirculation timer is activated. (page 13 - 14.)

Note: As shipped from the factory, the remote controller is set to display in °F and gallons.
To adjust the display to °C and liters, refer to the page 12.

● What is the home screen? ●

The home screen is displayed when the ON/OFF button is "ON".

Normally, the hot water temperature and the clock, etc. are displayed.

<Home Screen Example>

11. Remote initial setup

■ Initial Setting Procedure in the “System Settings” Screen

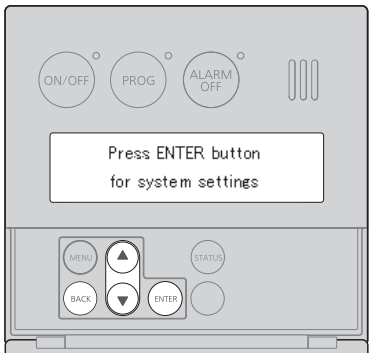

Note: When power is first connected to the multi-unit system (system controller and units), the remote enters an initial setting mode.
The following instructions explain how to perform an initial setting. If you need to change these settings at a future date, follow the instructions titled System Selection and Settings in the “Initial Settings” Screen (page 10 - 12).

Operation	Screen Display	Description
Preparation **Connect power to all heaters in multi-unit system.**		
1 **Press the ENTER button on the remote.**		
2 **1) You will be prompted to choose a system type.** **2) Use the ▲▼ buttons to navigate to the correct system type. (Standard, Recirc., or Tank Recirc.)** **3) Press the ENTER button to select your system type.**	System type [Standard] Select & press ENTER. ⇕ System type [Recirc] Select & press ENTER. ⇕ System type [Tank recirc] Select & press ENTER.	
3 **1) If you chose the “Recirc.” or “Tank Recirc.” systems, you will be prompted to turn pump rotation on or off (this setting is set to “off” by default).** **2) Use the ▲▼ buttons to select yes (on) or no (off).** **3) Press the ENTER button to set the pump rotation.**	Start pump rotation? [No] Select & press ENTER.	* Note: only when you connect one/two pumps to the system controller,you need to select “Yes” or “No”.
4 **1) You will now be prompted to “complete system setting.”** **2) Press the ENTER button to complete the system setting.** **3) Once you choose “Complete system settings?”, the remote will display “System settings completed”.**	Complete system settings? [Yes] Select & press ENTER. System settings completed	* Note: if you chose standard system in step 2 - 2), you will immediately go to this prompt. * You may use the BACK button to return to the previous menu at any time.

■ System Selection and Settings in the “Initial Settings” Screen

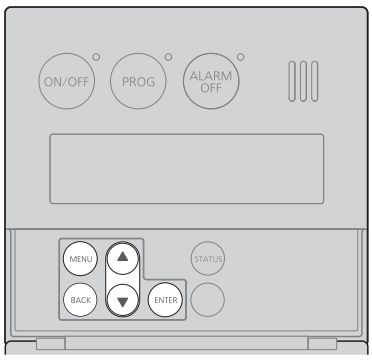

Note: Use this procedure if you need to change the system type or settings after running the “initial setting procedure”

List of the Initial settings

Sytem type	The system type can be changed.
Sys settings	The system settings can be changed.
[°F/gal]⇔[°C/L]	The unit of temperature and flow rate on the screen can be changed.
Adjust clock	The gap of time per month on the clock can be adjusted.
Save backlight	The power saving setting of the backlight on the screen can be changed.

Operation	Screen Display	Description
Access Initial Settings Menu.		
Preparation **1) Turn Remote off.** **2) Disconnect Power to all heaters in multi-unit system.** **3) Wait 10 seconds or more.** **4) Reconnect power, DO NOT turn remote on.**		
1 **Press the (MENU) button.**		
2 **Use the (▲▼) buttons “▼” to navigate to “Initial settings”.**	Menu Misc settings Sys monitor [▲▼ Initial settings]	
3 **Press the (ENTER) button to access the initial settings menu.**	Initial settings [▲▼ System type] Sys settings [°F/gal]⇔[°C/L]	* You may use the (BACK) button to return to the previous menu at any time.
Change System Type		
1 **In the initial settings menu select “System type”.**	Initial settings [▲▼ System type] Sys settings [°F/gal]⇔[°C/L]	
2 **The menu will have three options: Standard, Recirc., and Tank Recirc.**	System type ▲[Tank recirc]	
3 **1) Use the (▲▼) buttons to navigate to the appropriate system.** **2) Press the (ENTER) button to select the desired system.**		
4 **Once a system is selected, the remote will display “Set Complete”.**		* You may use the (BACK) button to return to the previous menu at any time.

Operation	Screen Display	Description
Change System Settings.		
1 **In the initial settings menu select "Sys settings".**	Initial settings System type Sys settings [°F/gal]⇔[°C/L]	
2 **1) The "Sys settings" menu will display several options for the selected system type.** **2) Press the ENTER button to select the system setting you would like to alter.**	Sys setting Quick staging Pump error check Pump rotation	
3 **1) Use the ▲▼ buttons to turn the feature on ("yes") or off ("no").** **2) Press the ENTER button to select "yes" or "no".** **3) The display will say "Set complete" once an option is chosen.**	Quick staging [No] Quick staging [Yes]	* You may use the BACK button to return to the previous menu at any time.

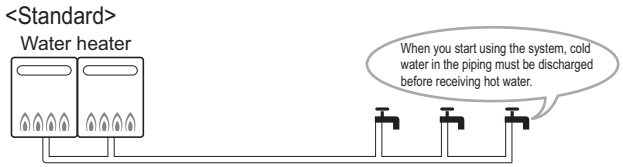

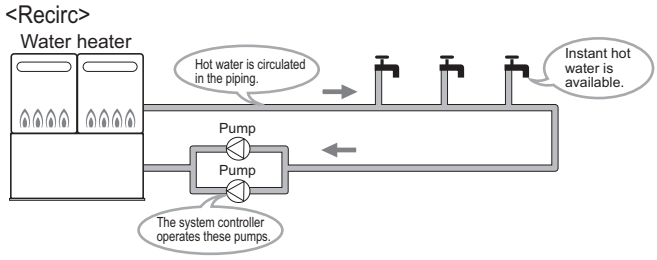

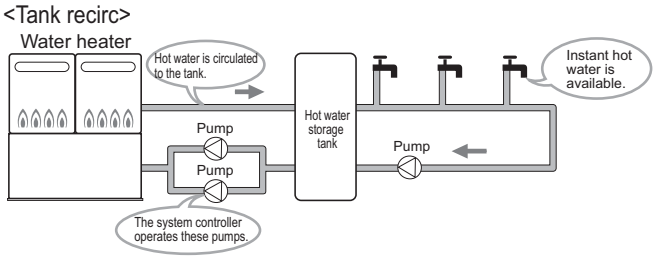

* These diagrams are for illustration purposes only.

List of the Sys settings

Item in the Sys settings	system type			Yes	No
	Standard	Recirc	Tank recirc		
Quick staging	Available	Available	Not Available	Units will stage more rapidly from heater to heater*	Units will stage more slowly
Pump error check	Not Available	Available	Available	System will check for flow when system controller pump terminals are energized. If no flow is present, it will display 63 error code	System will not check for pump operation*
Pump rotation	Not Available	Available	Available	System will rotate pump 1 and 2 operation	Pump 1 and 2 will operate simultaneously*

*Factory Default Settings

Operation	Screen Display	Description
Change the way the units of temperature and flow rate are displayed on the screen (standard vs. metric).		
1 1) In the initial settings menu select "[°F / gal] ⇔ [°C / L]". 2) Press the ENTER button.	Initial settings System type Sys settings [°F/gal]⇔[°C/L]	
2 1) Use the ▲▼ buttons to select the unit "[°F / gal] "or "[°C / L]". 2) Press the ENTER button to set the units to be displayed. 3) The display will say "Set complete" once an option is chosen.	[°F/gal °C/L Select unit	* You may use the BACK button to return to the previous menu at any time.
After finishing the Initial Settings.		
1 1) Disconnect Power to all heaters in multi-unit system. 2) Wait 10 seconds or more. 3) Reconnect power.		

12. Recirculation Pump Timer Setup

*This functionality is only available if you have selected “Recirc” as your system type in the “Initial Setting Procedure” and “System Selection and Settings” on page 9 to 10.

■ For System [Rcrc] Setting the Recirculation System Operation Timer

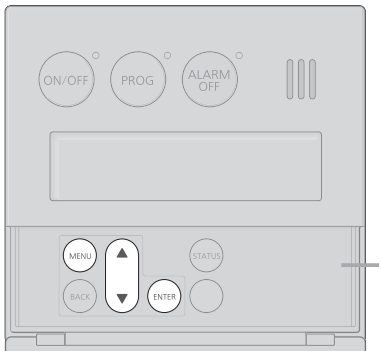

Cover shown in the open position.

*** With the recirculation operation timer set, hot water will be automatically circulated in the hot water pipes. Even with this function activated, it may take several minutes for hot water to be completely circulated through the plumbing system. Set the timer to activate the recirculation system prior to the first use of hot water to ensure hot water is instantly available.**
*** Multiple recirculation time periods can be set.**
*** Until the timer is deactivated (Next Page), the recirculation system will operate daily at the set times.**
*** When the recirculation system is turned “OFF” by the timer, the water heater will still remain “ON” and can be used normally.**

Operation	Screen Display	Description
This example describes setting the recirculation system to operate between 5:00 am - 8:00 am.		
Preparation **Check that the current time is properly set. (Setting the time page 18.)**		
1 **1) Press the MENU button inside the cover, Select "Recirc menu" using the ▲▼ buttons.** **2) Press the ENTER button.**	1) Menu / Set clock / Set PROG / Recirc menu 2) Recirc Menu / Synchro ON/OFF / Recirc on/off / Recirc timer	* You can set the timer regardless if the ON/OFF button is “ON” or “OFF”.
2 **1) Select "Recirc timer" using the ▲▼ buttons.** **2)Press the ENTER button.**	1) Recirc Menu / Synchro ON/OFF / Recirc on/off / Recirc timer (Example of a display) 2) AM 0 3 6 9 0 3 6 9 0 PM / AM--:-- to AM--:--	* The previous setting is displayed.
3 **1) Select "AM5:00" using the ▲▼ buttons.** **2) Press the ENTER button to complete the “Start” time setting.**	1) AM 0 3 6 9 0 3 6 9 0 PM / Here AM 5:00 to AM 6:00 2) AM 0 3 6 9 0 3 6 9 0 PM / AM 5:00 to AM 6:00	* Every time when you press the button, the time changes by one hour. [To keep the current “Start” time] Press the ENTER button without changing the "Start" time, and proceed to step 4. [To add additional time periods to the current setting, or to cancel the previous setting] 1) Press the ENTER button without setting "Start" time. 2) Press the ENTER button without setting "End" time. 3) Follow the procedures "Adding Additional Time Periods” or “Resetting All Time Periods” (**Next Page**).

Operation	Screen Display	Description
4		
1) Select "AM8:00" using the ▲▼ buttons. **2) Press the ENTER button to complete the "End" time setting.**	1) AM 0 3 6 9 PM 0 3 6 9 0 AM 5:00 to AM 8:00 Here 2) Timer set / Add / Reset	* Every time when you press the button, the time changes by one hour. [To keep the current "End" time] Press the ENTER button without changing the "End" time, and proceed to step 5.
<Adding Additional Time Periods>		* You can set multiple operation time periods.
1) Select "Add" using the ▲▼ buttons. **2) Press the ENTER button.** **3) Select the time period following the procedures in Steps 3 to 4.**	1) Timer set / Add / Reset 2) AM 0 3 6 9 PM 0 3 6 9 0 AM--:-- to AM--:--	
<Resetting All Time Periods>		
1) Select "Reset" using the ▲▼ buttons. **2) Press the ENTER button.** (All settings are cleared.) **3) Adjust the time period following the procedures in Steps 3 to 4.**	1) Timer set / Add / Reset 2) AM 0 3 6 9 PM 0 3 6 9 0 AM--:-- to AM--:--	
5		
Press the ENTER button to complete the time settings.	Set complete "Recirc timer" and "Recirc timer on" are altenately displayed on the menu (approximately 10 seconds) Temp 110°F AM 10:15 Recirc Lit (Example of home screen when the power ON/OFF button is turned "ON")	* The timer will not activate without pressing the ENTER button. * If the time is not set, the time setting screen is displayed. * Until the timer is deactivated, the recirculation system will operate daily at the set "Start" and "End" times.

● To Cancel the Recirculation System Operation Timer

1) Carry out steps 1 to 2. **2) Select "Cancelled" using the ▲▼ buttons.** **3) Press the ENTER button.**	1) Back / Cancelled AM 0 3 6 9 PM 0 3 6 9 0 2) Recirc timer off The screen returns to the Recirc Menu.	* If the ON/OFF button is "ON", the screen returns to the home screen in approximately 10 seconds.

13. System Check Button

If you press the STATUS button, you can check the status of the system

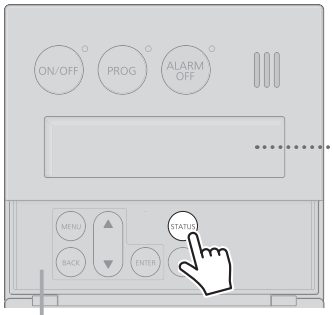

Cover shown in the open position.

System [Rcrc] Active [06]
Units [06] Pump1 [OFF]
Online [06] Pump2 [ON]

(Display Screen Example [System [Rcrc]])

System Displayed on the Remote Controller	System Description
System [Std]	Water heater only operation.
System [Rcrc]	* Water heater and recirculation operation. * During recirculation operation, hot water is always circulated in the piping to provide instant hot water when a fixture is opened. [If you set the ON/OFF button to "ON", is displayed.]
System [Tank]	* Water heater combined with a storage tank operation. * If a recirculation system is also installed, hot water is always circulated in the piping to provide instant hot water when a fixture is opened. [If you set the ON/OFF button to "ON", is displayed.]

14. Maintenance Monitors and Additional Settings

* It is necessary to check the flow rate for Recirculation system, and Storage Tank Recirculation system (for adjusting the cycle flow rate).

<Remote controller (RC-9018M)>

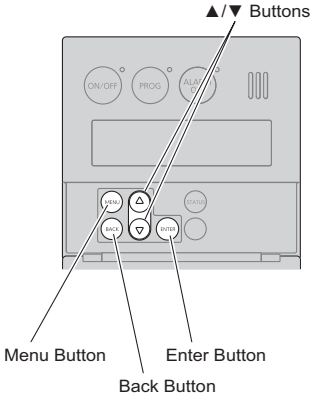

(1) Press Menu Button and press the ▼ Button several times to select "Sys monitor", and then press Enter Button.
(2) Press the ▼ Button once to select "Yes", and then press Enter Button for five seconds or more.

```
 No            Sys monitor
▲Yes                now ?
▼                 Press/hold
```

(3) Sys monitor is displayed.
Since item 03 is displayed first, you must push the ▲/▼ Buttons several times until item 14 is displayed.

(4) Flow rate screen is displayed.
* The unit of flow rate on the screen can be changed (refer to page 12.)

Item No.

```
Mnt>14   +00
1 040    4 000
2 000    5 000
3 000    6 ---
```

<Example of display (ºF/gal)>
Flow rate of unit 1 is 4.0 gal/min
Flow rate of unit 2 to 5 is 0 gal/min
unit 6 is not connected

```
Mnt>14   +00
1 150    4 000
2 000    5 000
3 000    6 ---
```

<Example of display (ºC/L)>
Flow rate of unit 1 is 15.0 L/min
Flow rate of unit 2 to 5 is 0 L/min
unit 6 is not connected

Unit No.

(5) Press Back Button.

(6) The screen that asks whether continue or cancel the Sys monitor is displayed.
Select "cancel" by pressing the ▼ Button to terminate the Sys monitor.

```
Sys mnt
continue>▲

   cancel>▼
```

■ Additional settings of system controller

Following setting can be changed in addition to the system settings.
When determining whether or not to change a particular setting, please consult with the customer first.

- Item No. 19
  When multiple units are connected to the system controller,two units fire upon startup as the factory default.
  However, this setting can be changed so that only one unit fires upon startup.
- Item No. 1A
  By factory default, the remote controller alarm will sound when a failure of the system controller or any water heater in the system has occurred.
  However, this setting can be changed so that the alarm sounds only when the entire system is down.

<Remote controller (RC-9018M)>

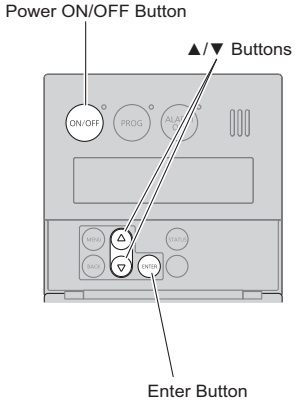

● Setting method (example to change Item No. 1A)

(1) Turn the water heater off by pressing the Power ON/OFF Button on the remote controller.
(2) Turn OFF the power supply (disconnect electrical power to all heaters), then turn ON the power supply (reconnect electrical power to all heaters) and wait 10 seconds before proceeding to step (3).
(3) Within the first ten minutes of connecting electrical power, before turning on the Power ON/OFF Button, press the ▲/▼ Buttons on the remote controller and hold until the display blinks "99". If "99" does not blink on the remote controller, disconnect electrical power to all heaters and try again.
(4) Use the ▲/▼ Buttons on the remote controller to scroll to the dipswitch number "1A" on the column of the item.
(5) Press the ENTER Button, "Item number" stops blinking and "Data state (OFF or ON)" will start blink.
Use the ▲/▼ Buttons on the remote controller to change OFF ←→ ON.
(6) Change "1A" from OFF to ON.
* Do not adjust any other dipswitches!

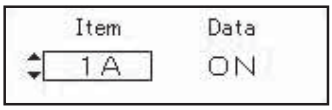

(7) When the dipswitch has been set correctly, press the ENTER Button, "Data state (ON)" stops blinking and "Item number" will start blink. Confirm the setting by pressing and holding both the ▲/▼ Buttons on the remote controller until the controller emits a beeping noise.
The new setting will be lost if this is not done.
(8) Disconnect Power to all heaters in multi-unit system.
Wait 10 seconds or more, and reconnect power.

List of settings

Item #	Data Indication	
19	OFF (Two units fire at startup)*	ON (One unit fires at startup)
1A	OFF (Alarm for any system error)*	ON (Alarm only for system down error)

* Factory Default Settings

15. Additional Remote features

For All Systems Clock Adjustment

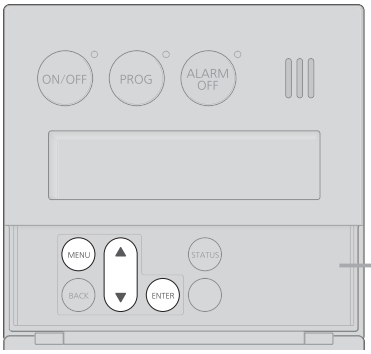

Cover shown in the open position.

Operation	Screen Display	Description
1 **Press the (MENU) button inside the cover.**	Menu Set clock Set PROG Recirc menu	* This adjustment can be made regardless of whether the (ON/OFF) button is ON/OFF.
2 **Press the (ENTER) button.**	Set clock [—:——]	
3 **1) Use the (▲▼) buttons to reset the clock.** **2) Press the (ENTER) button to complete the clock setting.**	1) Set clock [AM10: 15] (Ex: AM10:15) 2) Set complete The screen returns to the previous screen.	* The time changes in 1-minute increments with each press of the button, and then in 10-minute increments if the button is kept pressed down. * If the display is left untouched for approximately 20 seconds without pressing the (ENTER) button, the setting will be completed. When the (ON/OFF) button is turned ON, the home screen will be restored.

* In the event of a power outage or after disconnecting power to the water heater, when power is restored, the clock on the display screen will show " - : - - " and the clock will need to be reset.

For All Systems Locking the Remote Controller

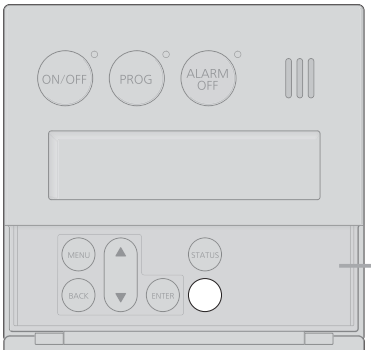

Cover shown in the open position.

By locking the remote controller, the settings cannot be accidentally changed if a button is pressed by mistake.

Operation	Screen Display	Description
1 **Press and hold button for approximately 2 seconds to lock the remote controller.**	Lock complete [PROG] [MENU] [Temp]	* The operation can be locked regardless if the ON/OFF button is "ON" or "OFF". * The operations of PROG, MENU, and ▲▼ buttons are locked. * Approximately 3 seconds after locking the remote controller, the display will return to the previous screen.
If you press these buttons PROG MENU ▲▼ **while the remote controller is locked, the "Locked" screen will appear.**	Locked [PROG] [MENU] [Temp]	* Approximately 3 seconds after the "locked" screen appears, the display will return to the previous screen.

● To Unlock the Remote Controller

Press and hold button for approximately 2 seconds to unlock the remote controller.	Unlock complete [PROG] [MENU] [Temp]	* Approximately 3 seconds after unlocking the remote controller, the display will return to the previous screen.

16. Additional System Controller Features

■ System Controller Terminals (Optional Connections)

Circulation Pump Terminals 1,2

- Use these terminals to control the pumps in any circulating system.
  Connected this way, the system controller will control the function of the pumps.
  Use normally open relays(electromagnetic switches) to supply power to the pumps.
  Use thermal relays if necessary.
  Connect them when they are used for recirculation system or storage tank recirculation system.
- Use electromagnetic contactors / thermal relays suitable for the load.

1) When operating with 1 circulation pump
* If there is only one pump, connect to "Pump 1" terminals.

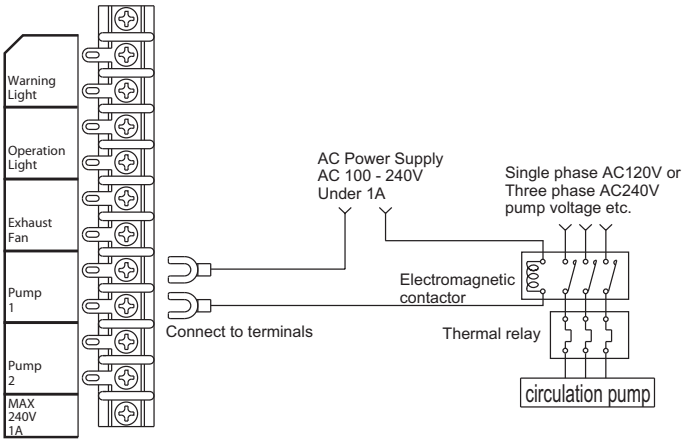

When you connect one circulation pump, set "No" for the question "Start pump rotation?" in the system settings. (refer to page 9.)

2) When operating with 2 circulation pumps

The system controller carries out the alternate operation of "pump 1" and "pump 2" at regular time intervals by connecting two circulation pumps.

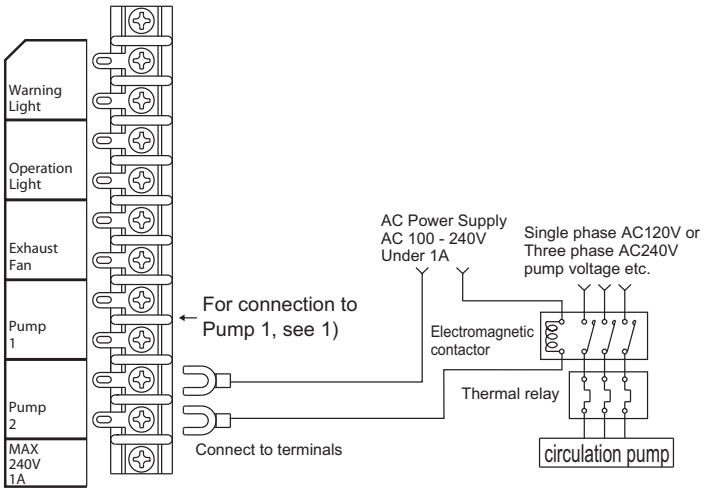

* Do not connect both of pumps 1 and 2 to the same terminal blocks.

When you connect two circulation pumps, set "Yes" for the question "Start pump rotation?" in the system settings. (refer to page 9.)

* Piping diagram for parallel pipe installation

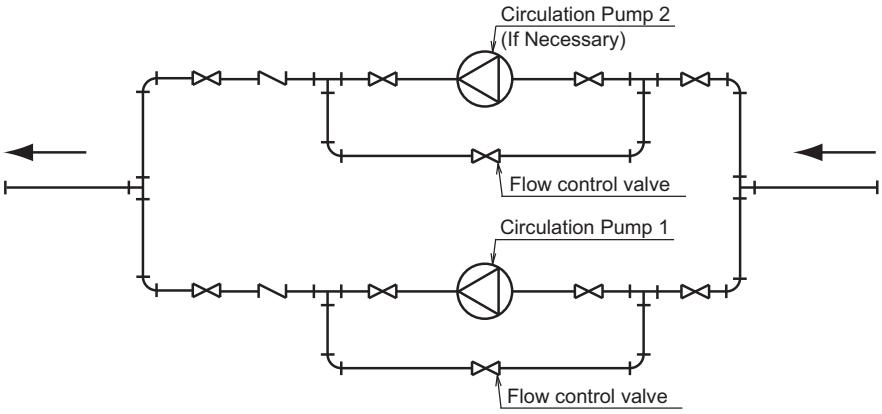

Adjust the pump flow with the flow control valves.
If multiple pumps are used, control the flow of each pump with separate valves.

Exhaust Fan Terminal

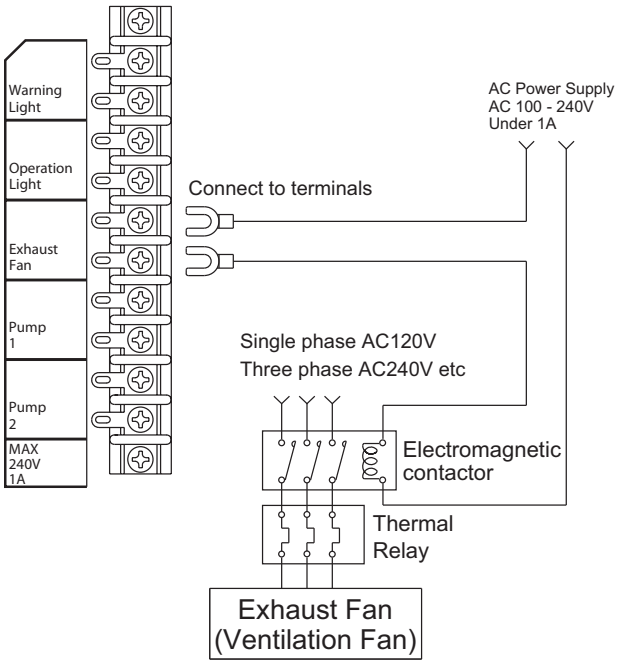

- These terminals will close when any of the units are firing or when the fan on any of the units is blowing. These terminals can be used to control an exhaust fan or damper in this way.
- Use a relay (electromagnetic contactor) to provide power to the fan or damper. Use an additional thermal relay if necessary.
- Use the electromagnetic contactor / thermal relay suitable for the load.

■ Connections of Pressure Switch, External Operation Switch, and Thermostat (input terminals)

* The input terminals are collected on the rear surface of the terminal block of the system controller. Pull out the wires after checking the tags.

Connecting the Pressure Switch

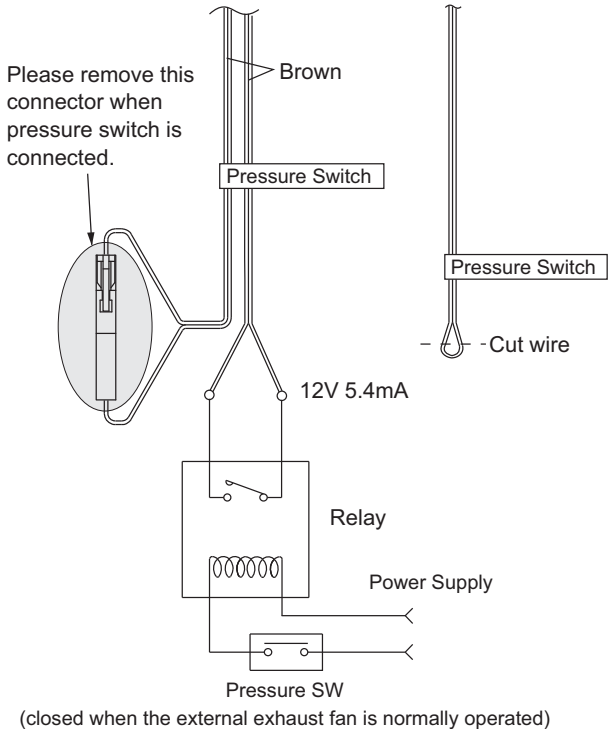

- A pressure switch or other item can be attached as a safety device when an external exhaust fan that is attached to the exhaust fan terminal above does not operate.
- If the status that a contact of the relay is opened continues, the system stops.
- Use the normally open relay with the contact for low voltage.
- This terminal is short-circuited when the product is shipped from factory. When you use this feature, cut a short-circuit electric wire and connect relay, and then disconnect a short-circuit connector.

Connecting the Thermostat

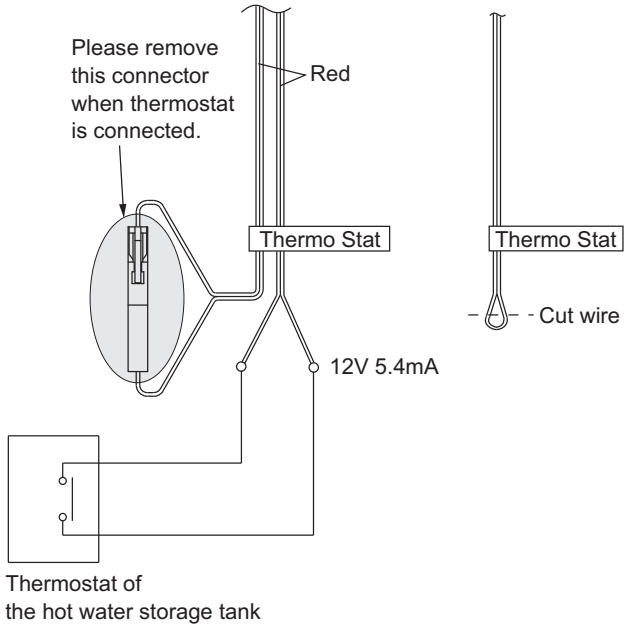

- Connect the thermostat of the hot water storage tank.
  - If the temperature of the hot water storage tank exceeds the temperature set with the thermostat, the contact in the thermostat is opened and the circulation pump stops.
  - A platinum resistance temperature detector cannot be connected directly.
- This terminal is short-circuited when the product is shipped from factory. When you use this feature, cut a short-circuit electric wire and connect the thermo stat, and then disconnect a short-circuit connector.

17. System design, Gas, and Water piping

■ System diagram (When six units are installed)

● Installation without a recirculation system (Standard System)

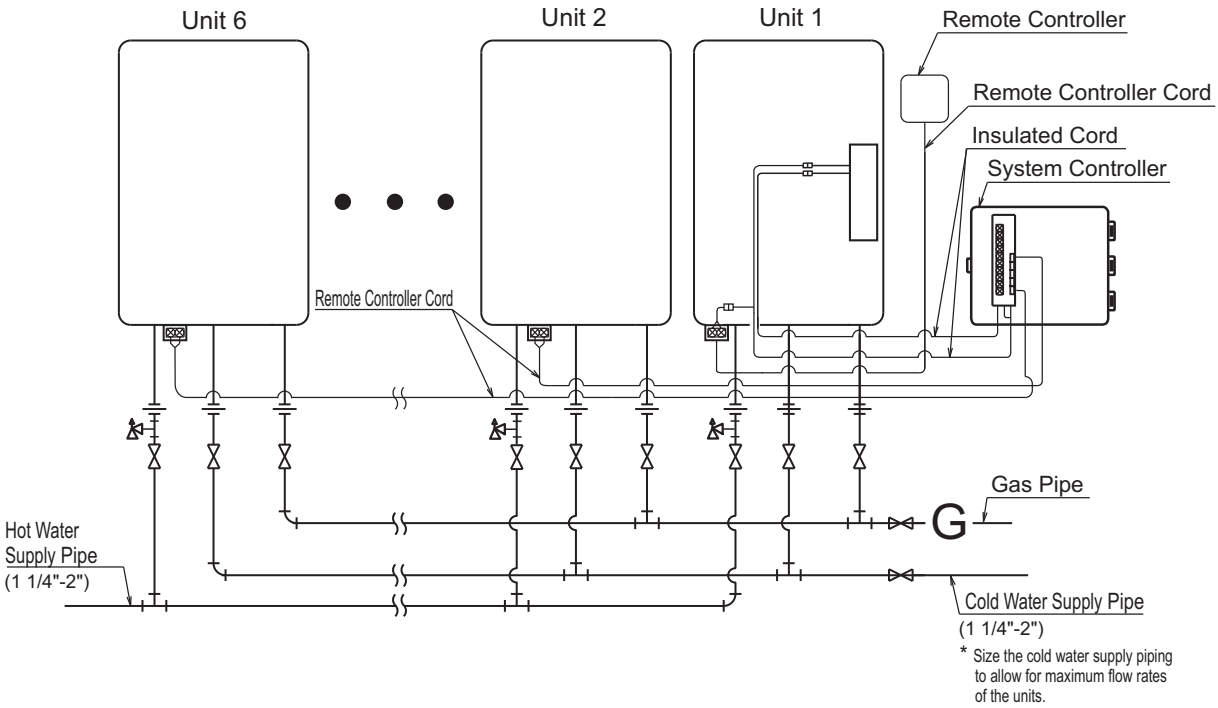

- Insulate or apply heating materials to both the cold water supply piping and the hot water supply piping to prevent freezing during cold weather and to prevent heat loss through the piping.

● Example of Recirculation with a Multi-unit System (Recirculation system)

This system will make hot water more quickly available to remote fixtures.
The pump will circulate water through the loop until the entire loop is warm, and then the system controller will turn off the pump until the loop cools down.

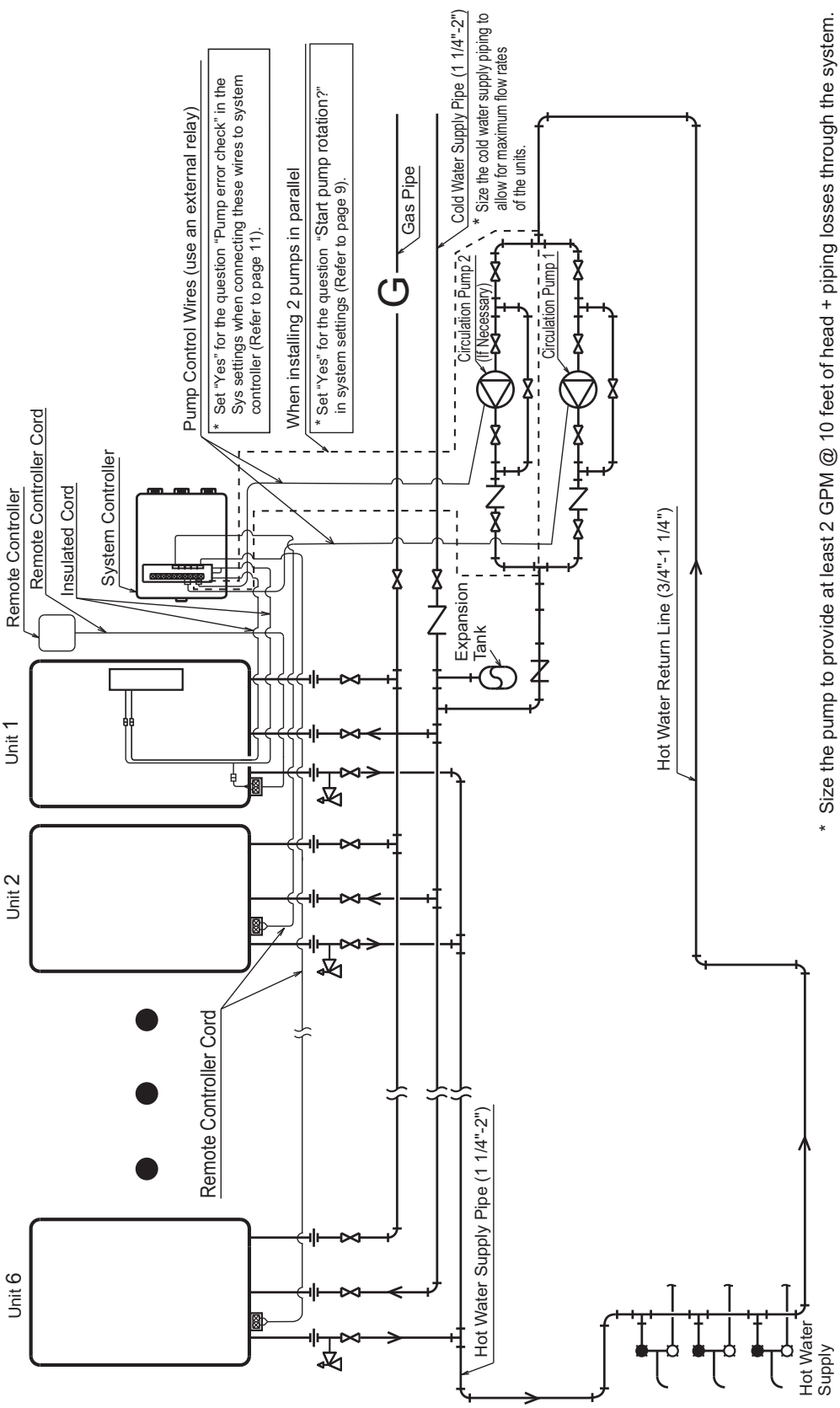

* Size the pump to provide at least 2 GPM @ 10 feet of head + piping losses through the system. Check the maintenance monitors on the unit to make sure the pump is providing adequate flow.
- Make sure that the flow rate is not greater than 4 ft./sec.
  (3/4": 5 GPM, 1 1/4": 13 GPM)
  If the flow is too low, the recirculation loop temperature will not be warm enough, if the flow is too high, the lifetime of the unit will be reduced.
* If there are multiple circulation loops, try to make the flow rate .75-1.25 GPM in each loop.
* Use copper or stainless water piping for the entire system.

● Example of Installation with a Storage Tank and Recirculation System (Tank recirculation system)

The pump will push water through the Multi-unit System to heat up the tank.
When the temperature of the thermostat is high, the system controller will turn off the pump until the the temperature cools down.

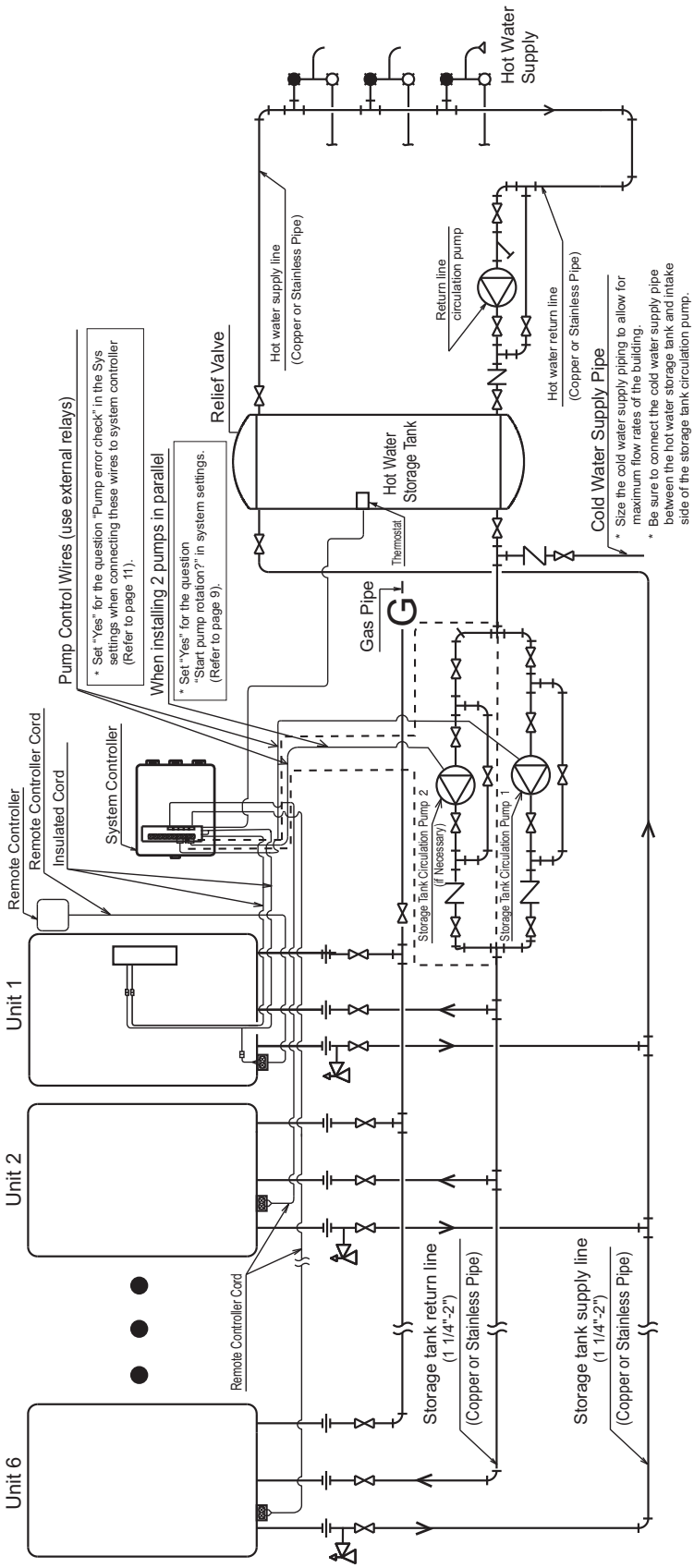

* For the set temperature of the remote controller, use the temperature (of the thermostat) + about 10°F.

* To achieve the highest recovery, size the storage tank circulation pump for maximum capacity.
For NCC991 serires: (9 GPM (each) @ 40 ft. of head (160°F setting or less) + piping losses through the system.)
For NC1991 series: (7 GPM (each) @ 35 ft. of head (160°F setting or less) + piping losses through the system.)
Verify the supply pressure to the units is at least 30 PSI.

■ Gas piping

* Follow the instructions from the gas supplier.

■ Gas connection

- Gas flex lines are not recommended unless they are sized for the maximum input kW (Btu/h • MJ) of each unit.
- Do not use piping with a diameter smaller than the size of the gas inlet to each unit.
- After installation, check the gas line for any leaks before using.

■ Gas Valve

Install a gas shutoff valve for every unit installed.

■ Gas Meter

Select a gas meter capable of supplying the entire kW (Btu/h • MJ) demand of all gas appliances that the meter serves. Size the gas line for the entire kW (Btu/h • MJ) demand also.

■ Water piping

* Ask a qualified plumber to perform the installation.
* Observe all applicable codes.

- The plumbing should be installed by a qualified plumbing contractor according to all applicable codes and regulations.
- Insulate or apply heating materials to the supply and hot water piping to prevent freezing during cold weather and to prevent heat loss through the piping.
- Use a union coupling or flexible pipe for connecting the units to ease service and maintenance.
- Refer to the system diagrams for supply and hot water pipe sizing. Do not install piping that is smaller than the inlet or outlet water connections on the units.
- If using an expansion tank, make sure it is correctly sized for the system.
- Use only copper or stainless steel pipe for all plumbing.
- Keep the plumbing as simple as possible.
- Avoid using pipes in which air can accumulate.

* Use only approved materials, and have the installation inspected upon completion.

18. Follow-up Service

■Checking for Error Conditions

When a failure occurs, information relating to the error blinks on the display.
The error alarm may also continuously sound.

● Error Code Display Screen

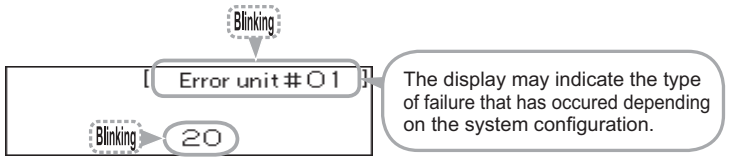

● To Stop the Error Alarm

Press the (ALARM OFF) button (the indicator will turn off).

■Requesting Service

* Service and warranty periods are based on the type of product and the application type. Refer to the Limited Warranty provided with the water heater for complete details.

* Refer to the "Troubleshooting" section in the Owner's Guide supplied with the water heater. If the problem is not corrected, contact Noritz America Technical Support at 866-766-7489 or visit http://support.noritz.com/.

● Press the (STATUS) button to check the status of the system

Operation	Screen Display	Description
1 **Press the (STATUS) button inside the cover.**	System [Rcrc] Active [04] Units [06] Pump1 [OFF] Online [04] Pump2 [ON] <Screen display (Example)>	* Status can be checked regardless of whether the (ON/OFF) button is ON/OFF. * If the (BACK) button is pushed or it is left untouched for approximately 10 minutes, it will return to the previous screen.
● Identifying units that require service (system dependent).		
Press the (STATUS) button twice inside the cover.	Error unit 1 – – – – 6 – – – – – – – – – – – – – – – – – – <Screen display (Example)>	* If you press the (BACK) button, the screen of step 1 is displayed. If you press the (STATUS) button, the screen returns to the previous screen.

If at any time during the installation and setup of this product you have questions or concerns, please contact Noritz America Engineering & Service at 866-766-7489 or visit http://support.noritz.com/.